This is only provided as a general guide. Viridian Glass disclaim any responsibility for loss of damage suffered from the use of this information. Always specify Viridian Glass / Euroglass to supply and install this solution to guarantee that it is installed in accordance to this design.

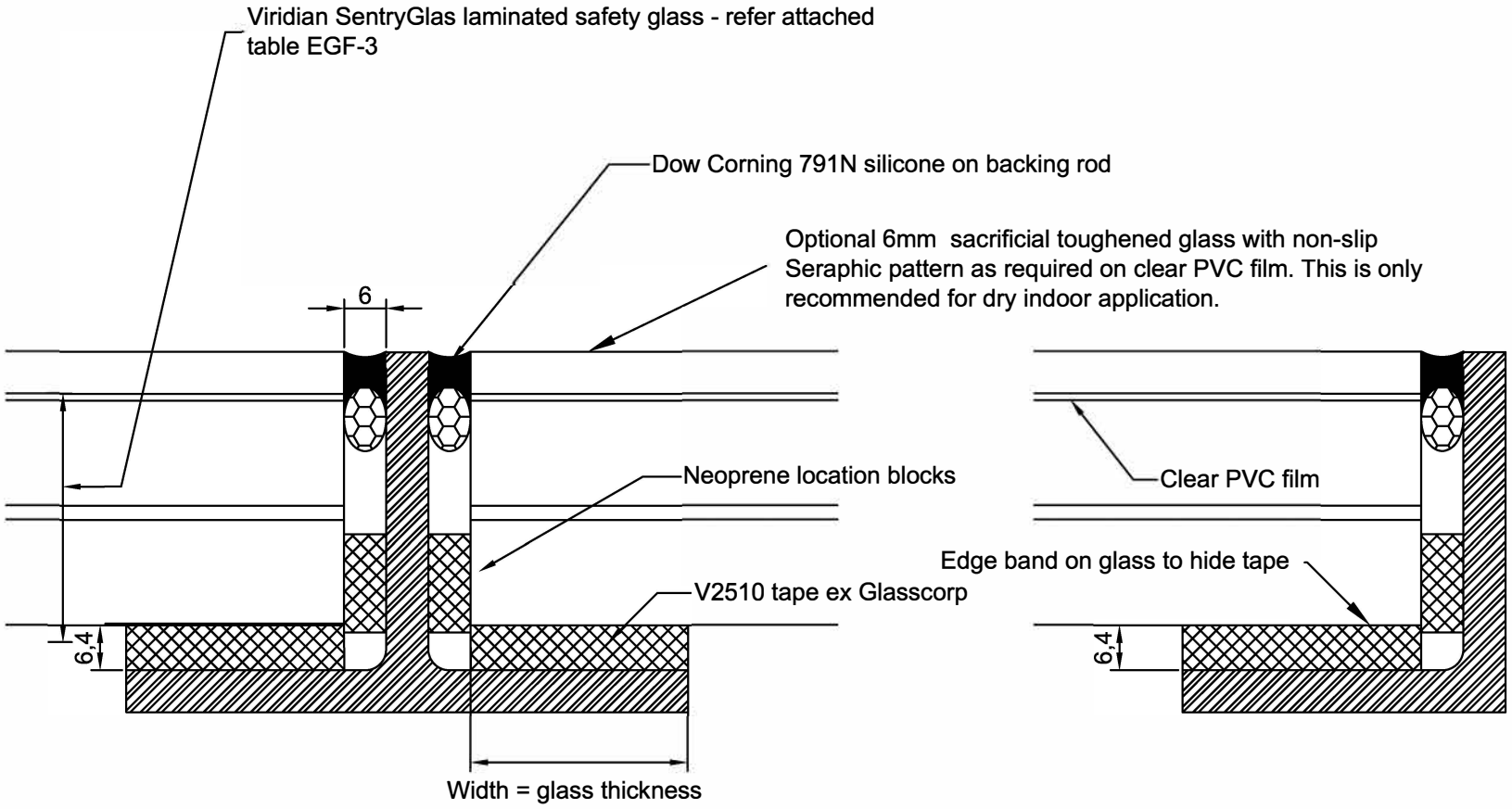

INTERMEDIATE STEEL SUPPORT

PERIMETER STEEL SUPPORT

Viridian we ♥ glass

GLASS FLOOR - SUPPORT DETAILS

date	12-1-15
scale	1:1
drawing	EGF-1b

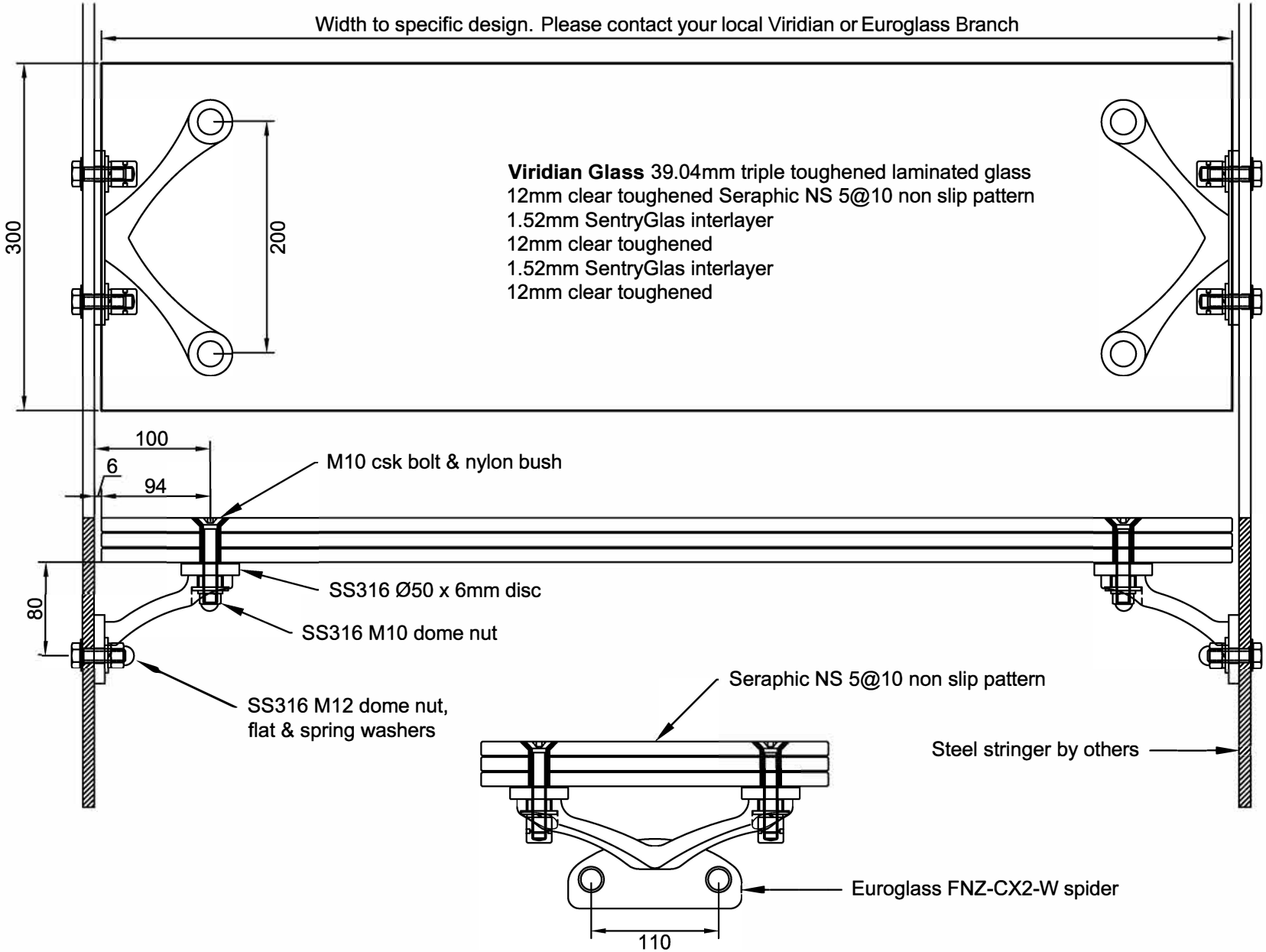

INTERNAL GLASS STAIR TREAD

date	2-2-16
scale	1:5
drawing no	ST-1c

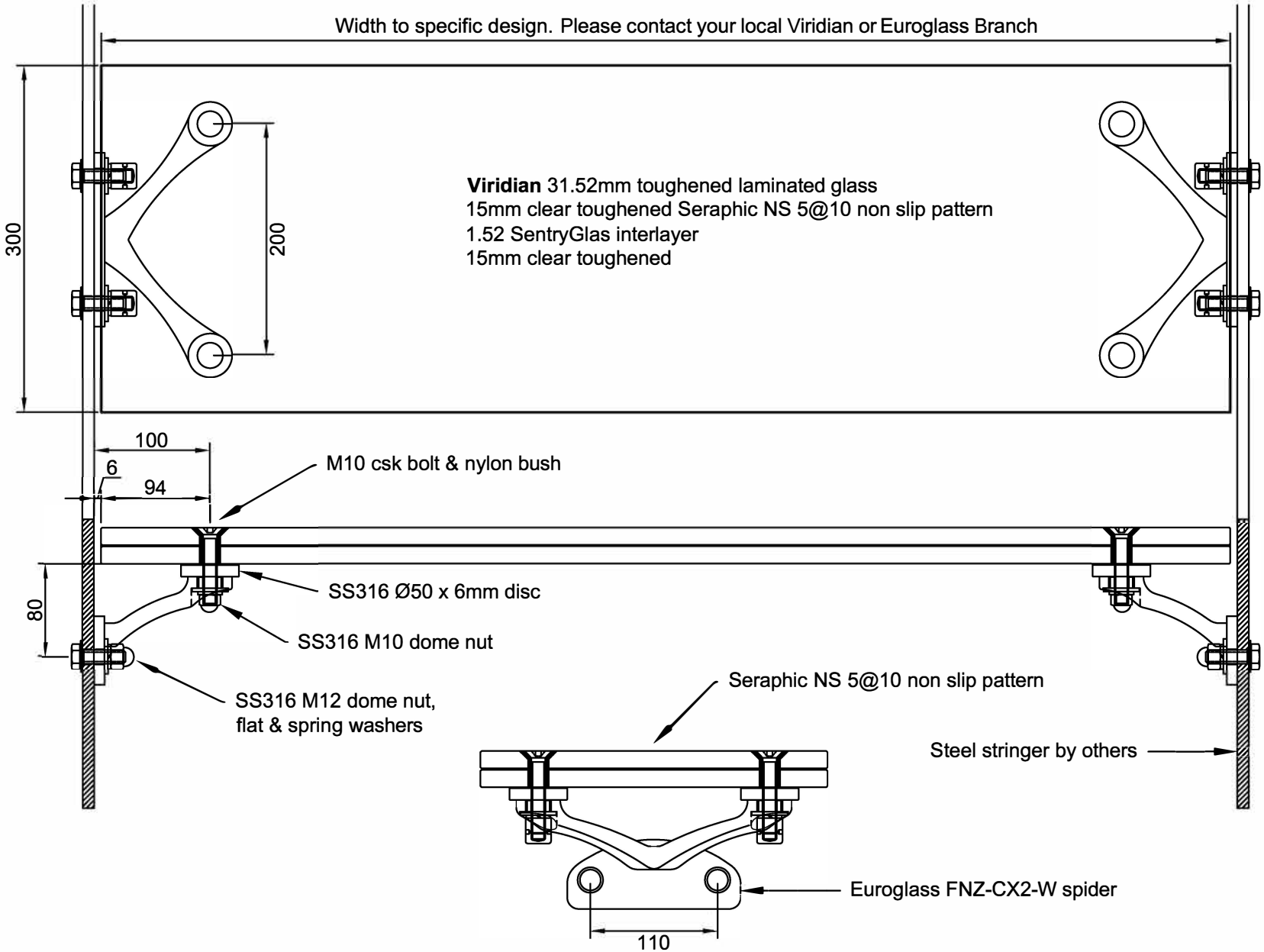

Viridian we glass

INTERNAL GLASS STAIR TREAD

date	2-2-16
scale	1:5
drawing no	ST-2c